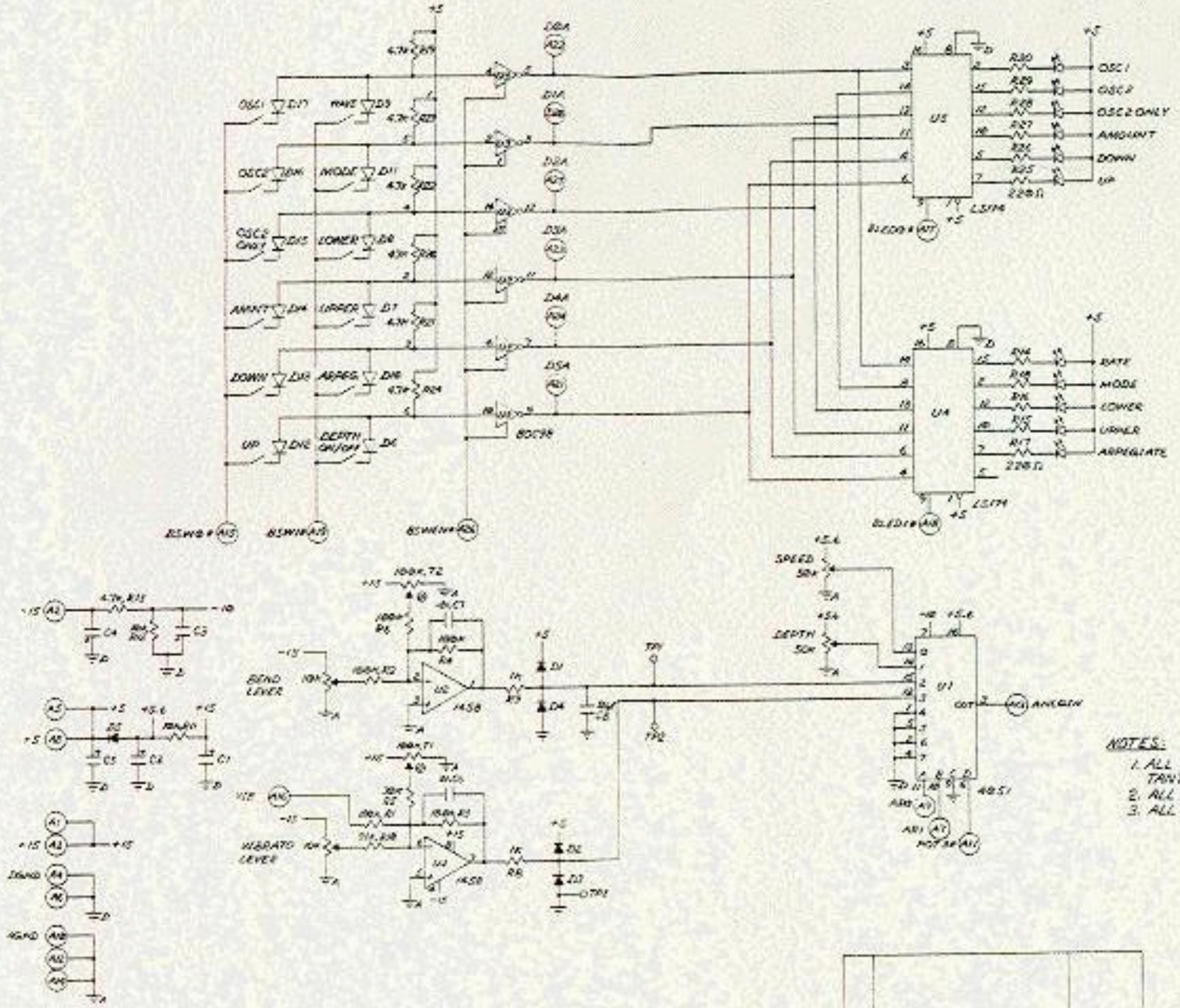

LTR	REVISION	DATE
B	ECO 411	1-6-83
A	INITIAL RELEASE	12-1-82

SHEET 1 OF 1

OBERHEIM ELECTRONICS INC.

– SCHEMATIC –

OB-8 BEND BOARD

J.R.

1680B

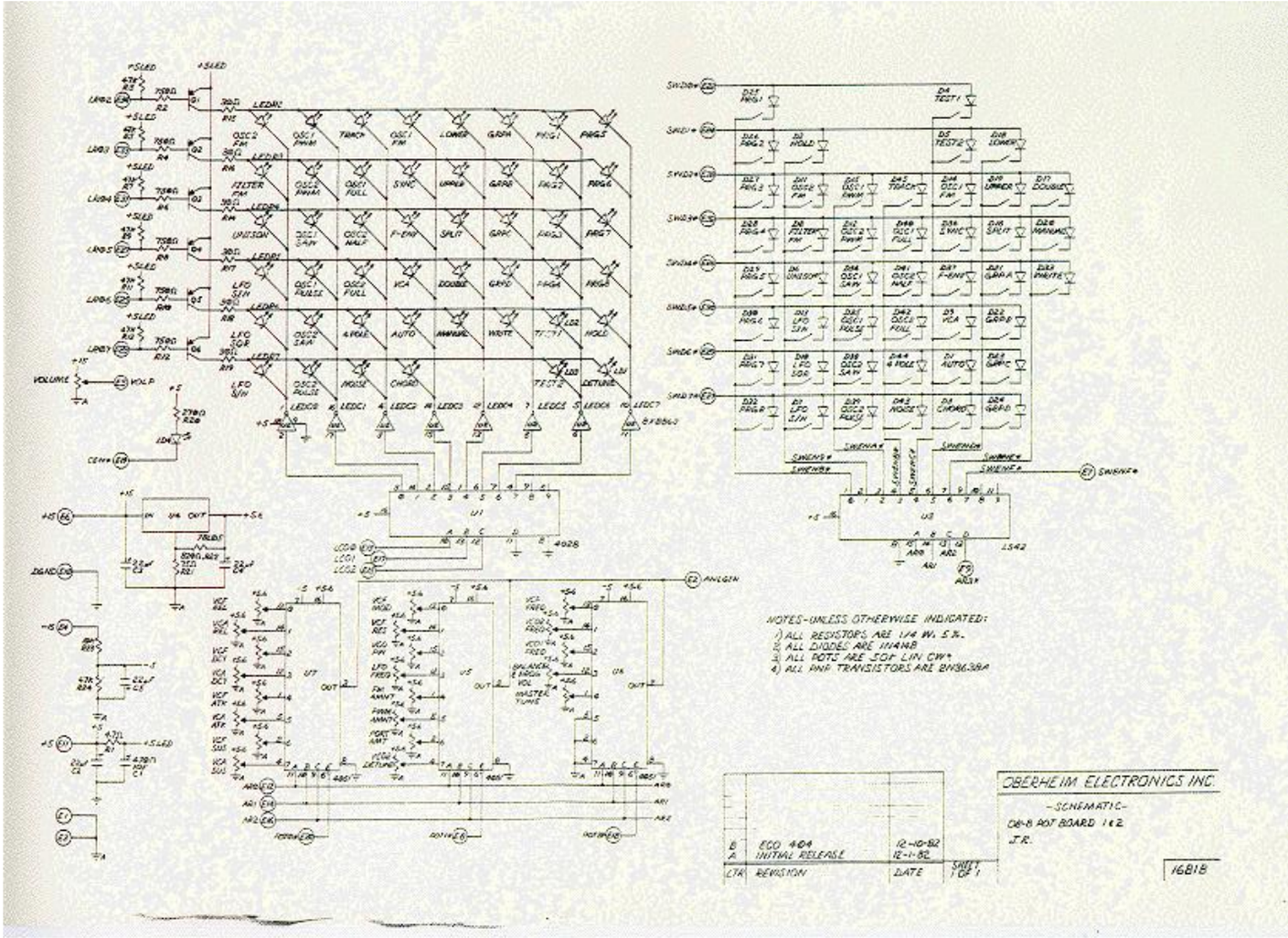
NOTES-UNLESS OTHERWISE INDICATED:
1) ALL RESISTORS ARE 1/4 W. 5%.
2) ALL DIODES ARE 1N4148
3) ALL POTS ARE 50K LIN CW+
4) ALL PNP TRANSISTORS ARE 2N3638A
ECO 404
INITIAL RELEASE
12-10-82
12-1-82
LTR
REVISION
DATE
SHEET 1 OF 1
OBERHEIM ELECTRONICS INC.
-SCHEMATIC-
OB-8 POT BOARD 1&2
J.R.
16818

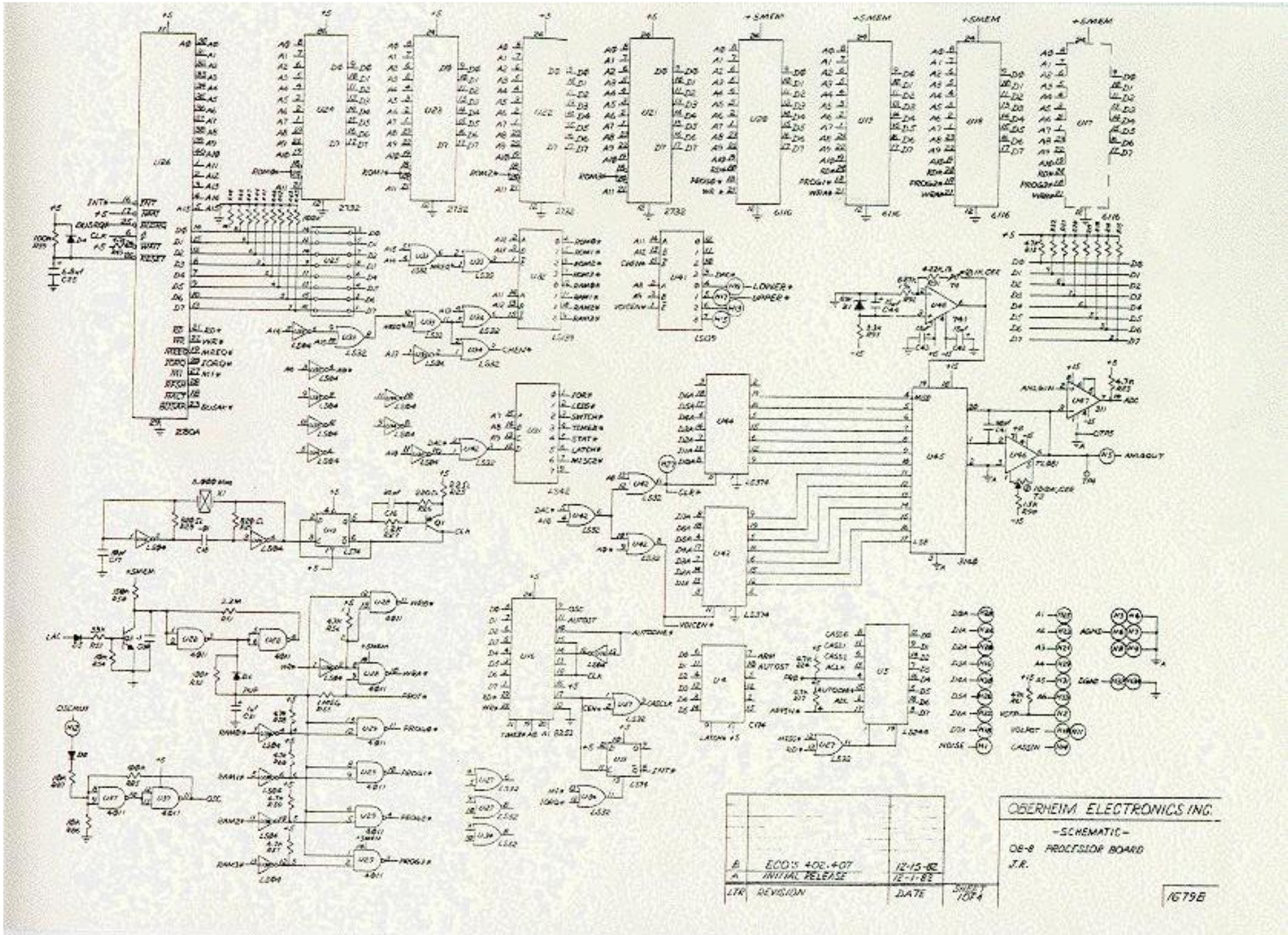
OBERHEIM ELECTRONICS INC.
-SCHEMATIC-
OB-8 PROCESSOR BOARD
J.R.
ECO'S 402-407
INITIAL RELEASE
12-15-82
12-1-82
REVISION
DATE
SHEET 1 OF 4
1679B

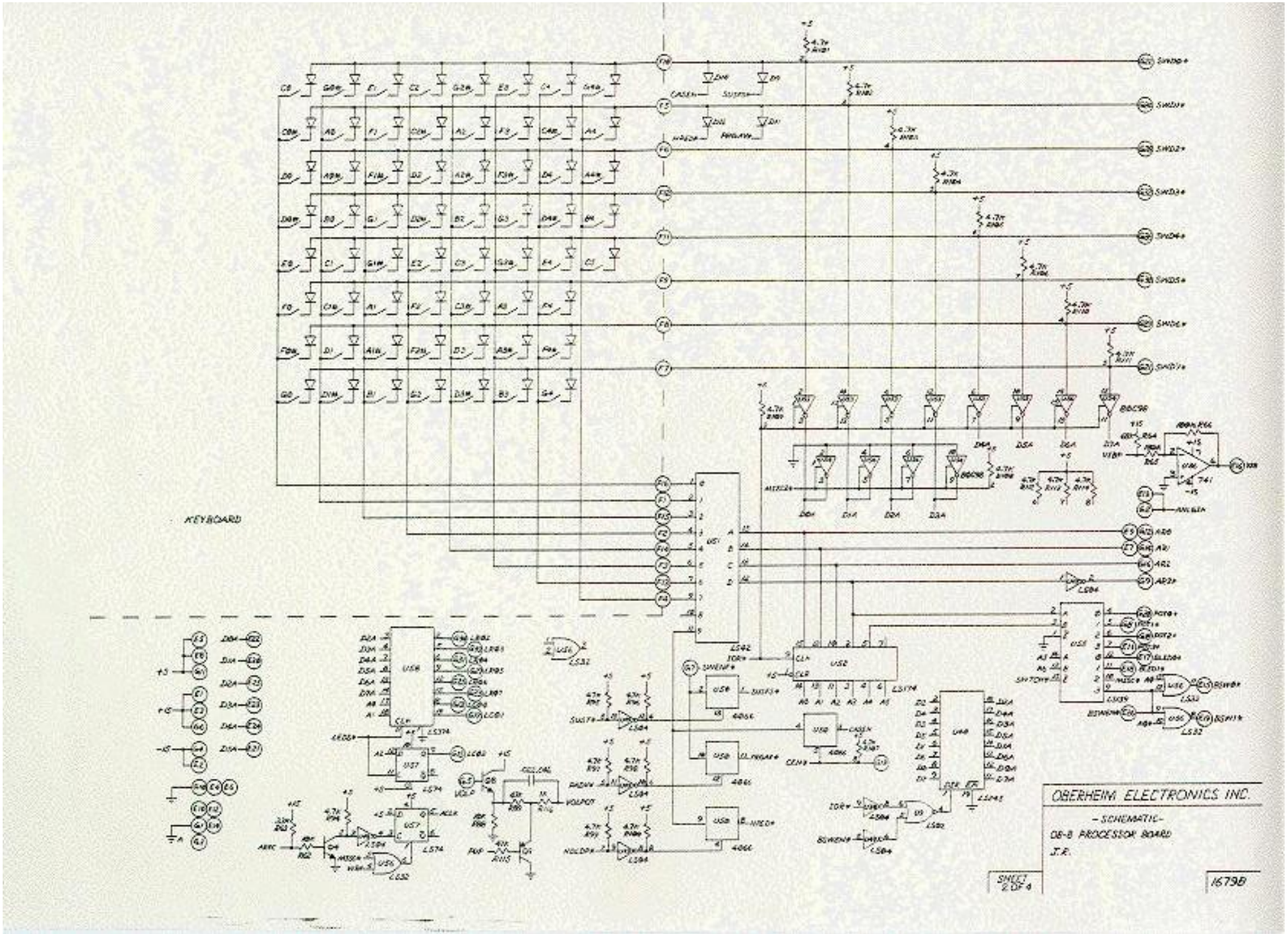
KEYBOARD
OBERHEIM ELECTRONICS INC.
- SCHEMATIC -
OB-8 PROCESSOR BOARD
J.R.
SHEET 2 OF 4
16798

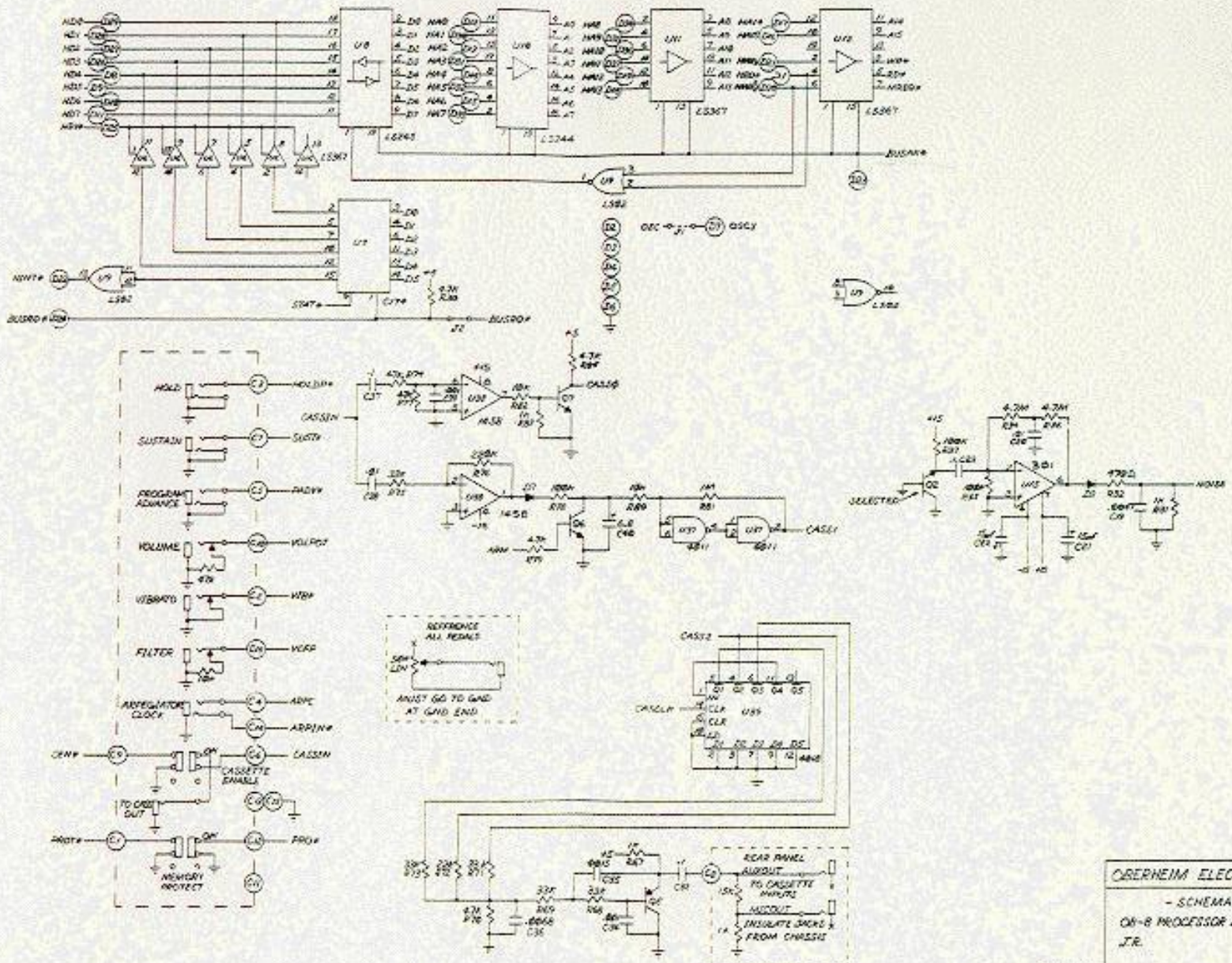

OBERHEIM ELECTRONICS INC.

- SCHEMATIC -

OB-8 PROCESSOR BOARD

J.R.

SHEET 3 OF 4

16798

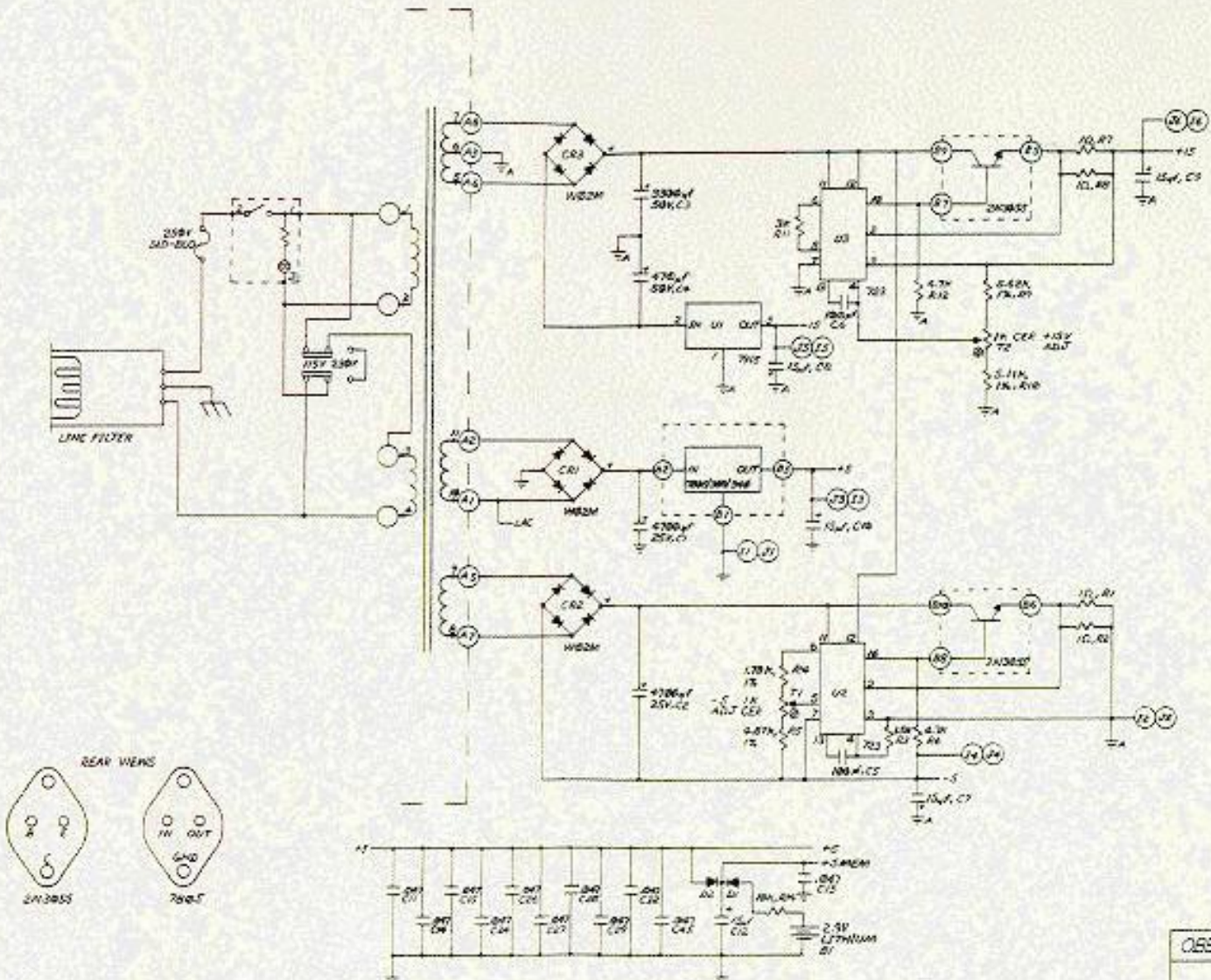

OBERHEIM ELECTRONICS INC.

- SCHEMATIC -

OB-8 PROCESSOR BOARD POWER SUPPLY

J.R.

SHEET 4 OF 4

16798

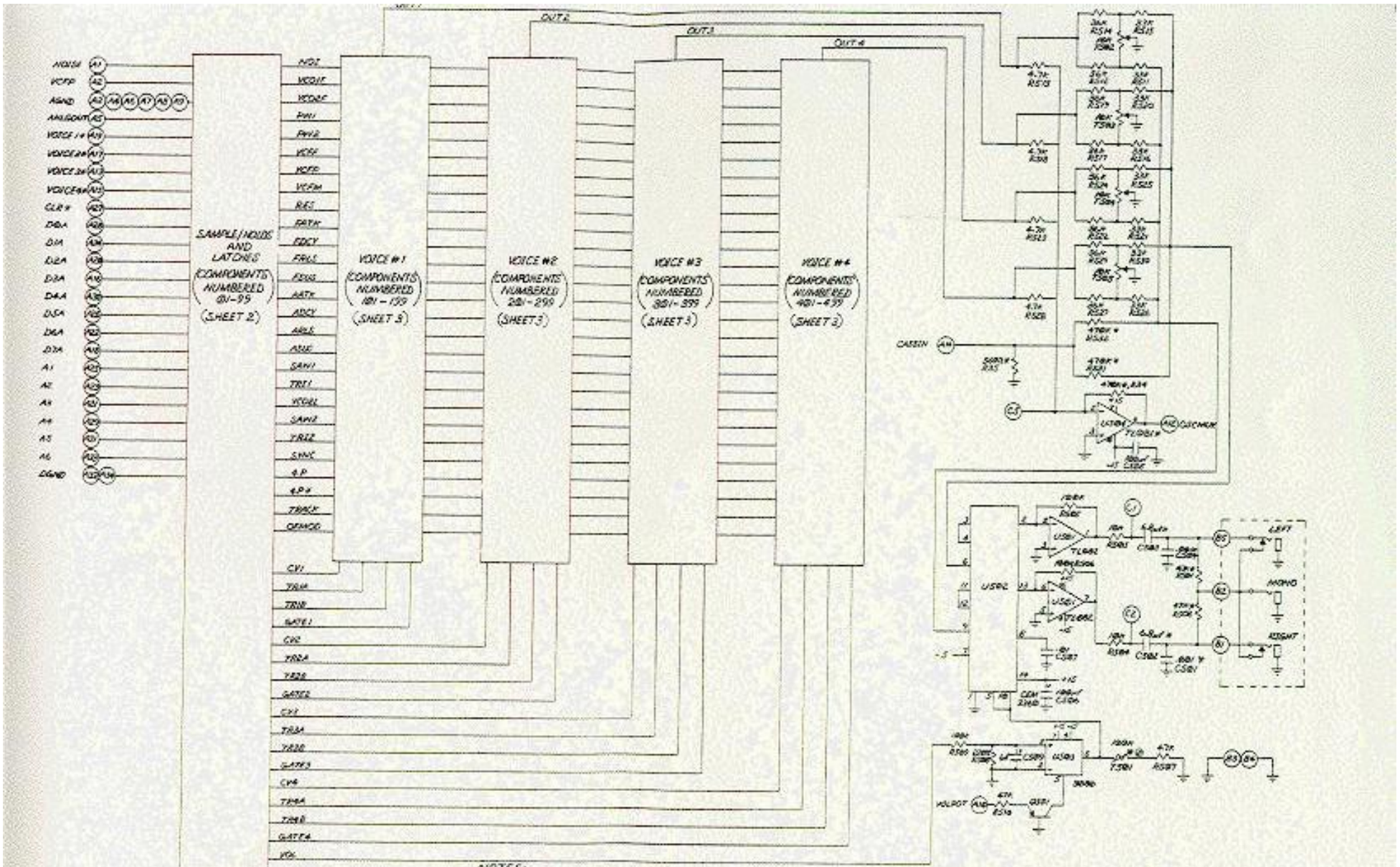

LTR	REVISION		
B	ECOS 403-405-406-409	12-22-82	
A	INITIAL RELEASE	12-1-82	

SHEET 1 OF 3

OBERHEIM ELECTRONICS INC.

-SCHEMATIC-

OB-8 VOICE BOARD

J.R.

1682.B

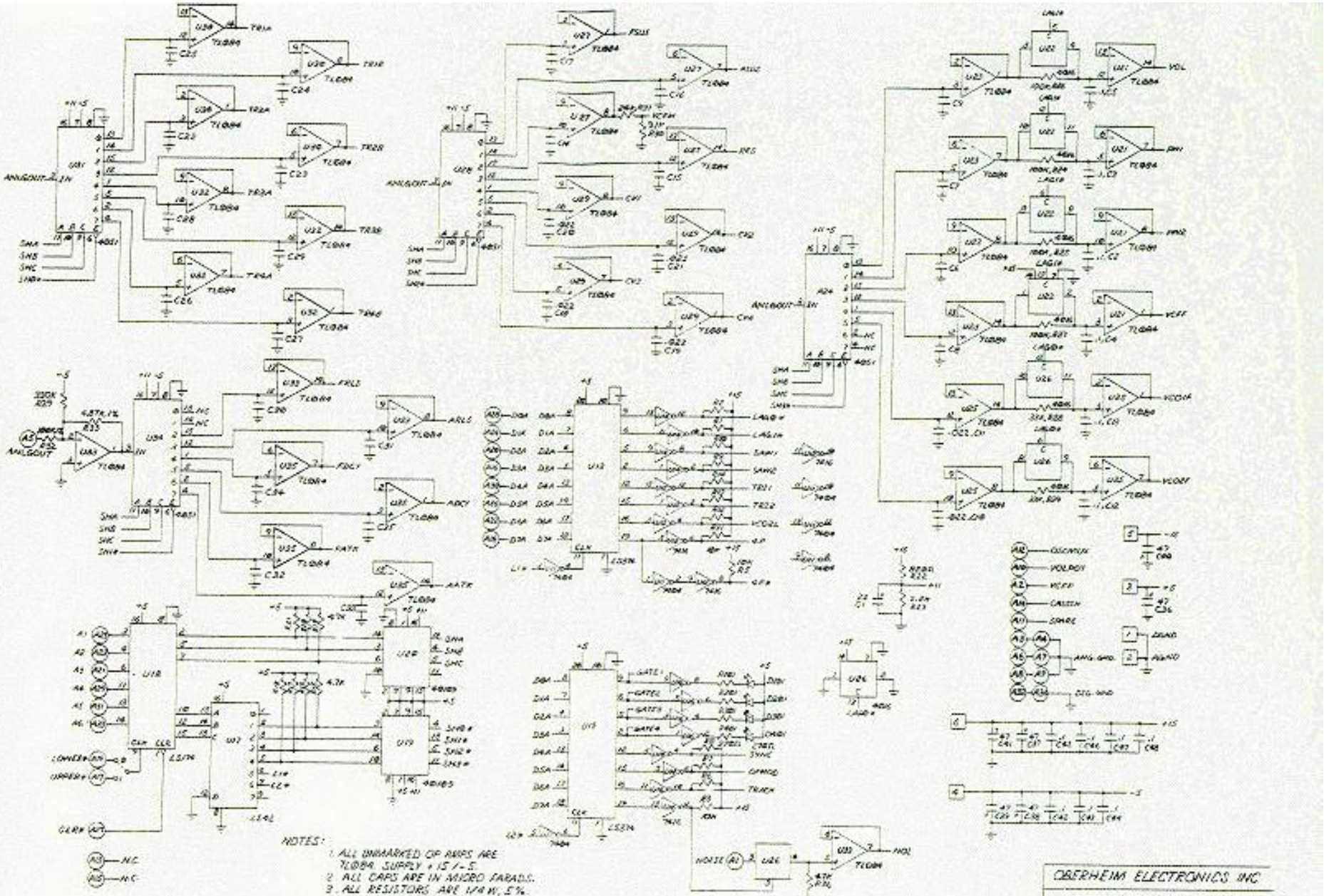

NOTES:

1. ALL UNMARKED OP AMPS ARE TL084. SUPPLY +15 / -5.
2. ALL CAPS ARE IN MICRO FARADS.
3. ALL RESISTORS ARE 1/4 W, 5%.
4. ALL UNMARKED CAPS ARE .01 MF
5. .022 CAPS ARE POLYSTYRENE

OBERHEIM ELECTRONICS INC.

-SCHEMATIC-

OB-8 VOICE BOARD

J.R.

SHEET 2 OF 3

1682-B

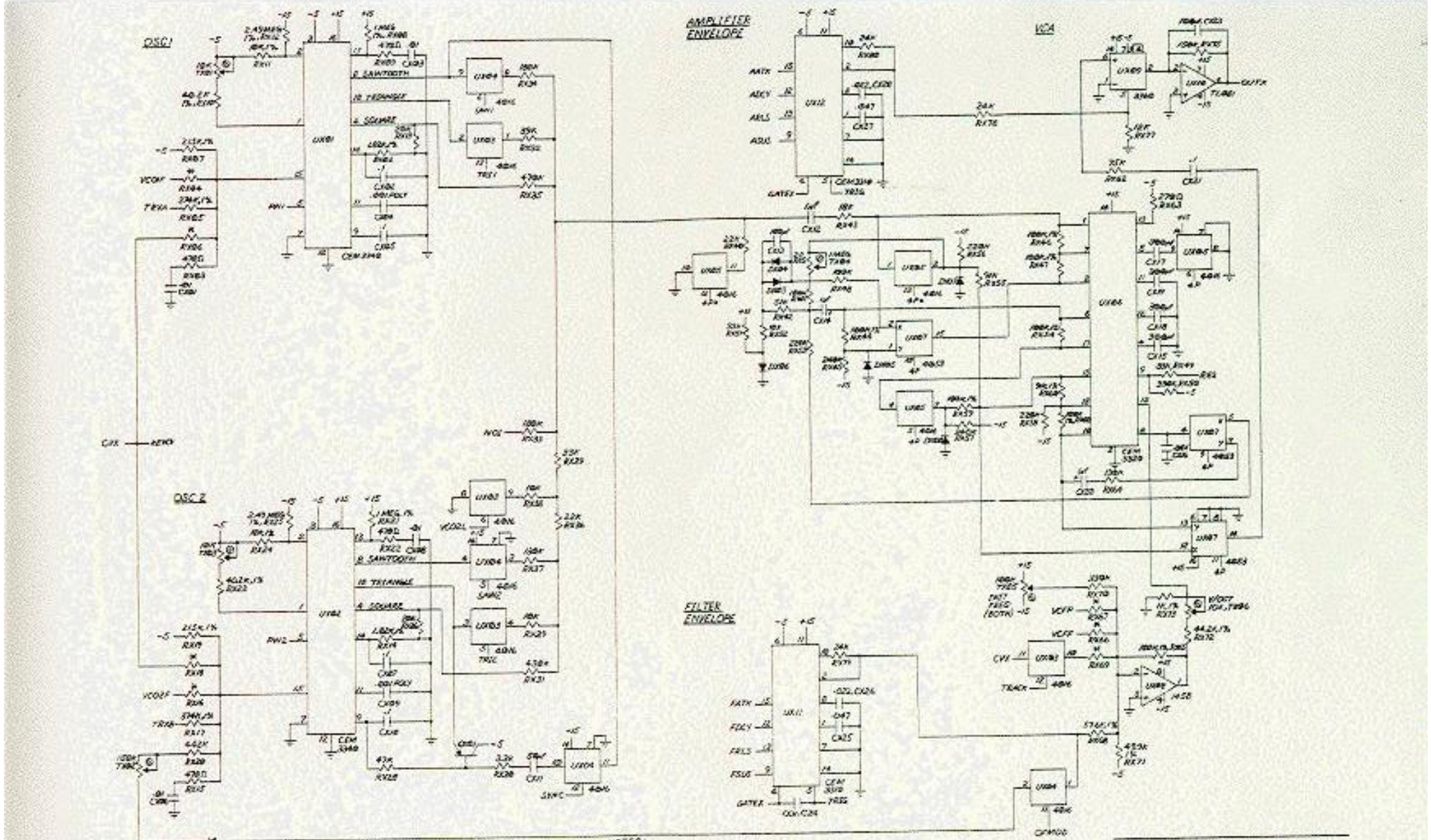
OSC 1
OSC 2
AMPLIFIER ENVELOPE
VCA
FILTER ENVELOPE
NOTES:
1. ALL NPN TRANSISTORS ARE MPS3172.
2. ALL PNP TRANSISTORS ARE 2N3905.
3. ALL DIODES ARE 1N4148.
4. "X" DENOTES VOICE No. (1,2,3,4).
5. "*" DENOTES MATCHED, 100K, 1% RESISTORS.
OBERHEIM ELECTRONICS INC.
- SCHEMATIC -
OB-8 VOICE BOARD
J.R.
SHEET 3 OF 3
1682B